PumpWorks™

PWA | GEN 2

ANSI / ASME B73.1

PROCESS PUMP

MANUFACTURED & TESTED IN THE USA

THE BEST QUALITY • THE FASTEST DELIVERY

PWA | GEN 2

5 Year Unconditional Power Frame Warranty is Standard.

Innovative Power Frame Features

- All new power frame design for enhanced reliability. US Patent 10,288,081.
- 25% more cooling surface than PWA GEN 1.
- Sealed lubrication chamber.
- ISOMAG™ magnetic seals IP65 rated Power Frame sealing.
- Sloped and segregated drain for contaminant isolation.
- Predict Plus™ GEN 2 proactive pump monitor.
- Zero oil power frame oil maintenance for up to 5 years when using SHELL Turbo S4 x 32 lubricant.

Carbon Steel vs. Ductile Iron

- High strength, impact resistant Carbon Steel liquid ends for improved durability and pressure containment.
- Replaces non-repairable, ductile iron casing and impellers, with repairable carbon steel, for extended component life.
- 30% Higher Thermalconductivity than Cast Iron for improved heat dissipation, lower oil temperature and longer bearing life.

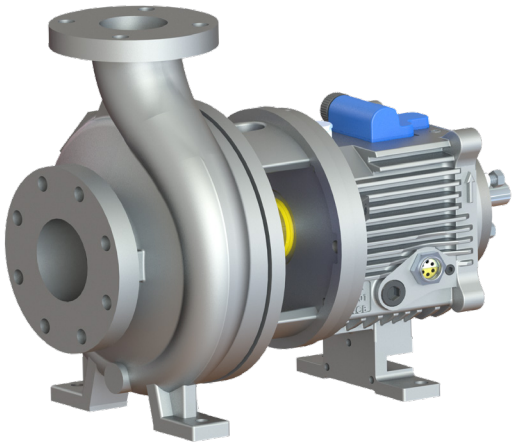

Shaft and Bearing Assembly

- Upgraded 316L SS vs. 4140 steel pump shaft is standard at no additional cost.
- Proven flinger disk lubrication device to ensure effective bearing lubrication. Provides 30% increased bearing L-10 life and minimun 15ºF lower bearing operating temperatures compared to flood oil design.

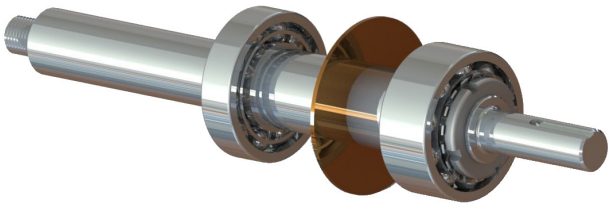

DESIGN FEATURES AND BENEFITS

Casing Gasket
- Fully confined to maximize liquid sealing
- Protects casing fits from corrosion, therefore increase maintenance ease and proper alignment during reassembly

Seal Chamber / Sealing Options
- Multiple seal chambers for maximum sealing flexibility for all process applications
- Accommodates all mechanical seal manufacturer's component and ANSI cartridge seal configurations
- Supports the full array of CPI seal support system options
- Ensures superior leak protection with maximum heat dissipation, maximizing seal life and pump reliability

Predict Plus™ GEN 2 Proactive Pump Monitor
- Temperature and 3 axis vibration monitoring
- IP66 and Class 1, Div. 2 compliant

Casing
- Carbon Steel ASTM A216 material standard for improved durability and pressure containment
- Precision serrated flange face finish for optimum gasket retention and sealing
- Class 150# standard and 300# option
- Self venting, centerline mounted discharge flange
- Casing thickness exceeds ASME B73.1specification for increased casing life
- Back pull out design for easy maintenance
- Full line of corrosive resistant materials

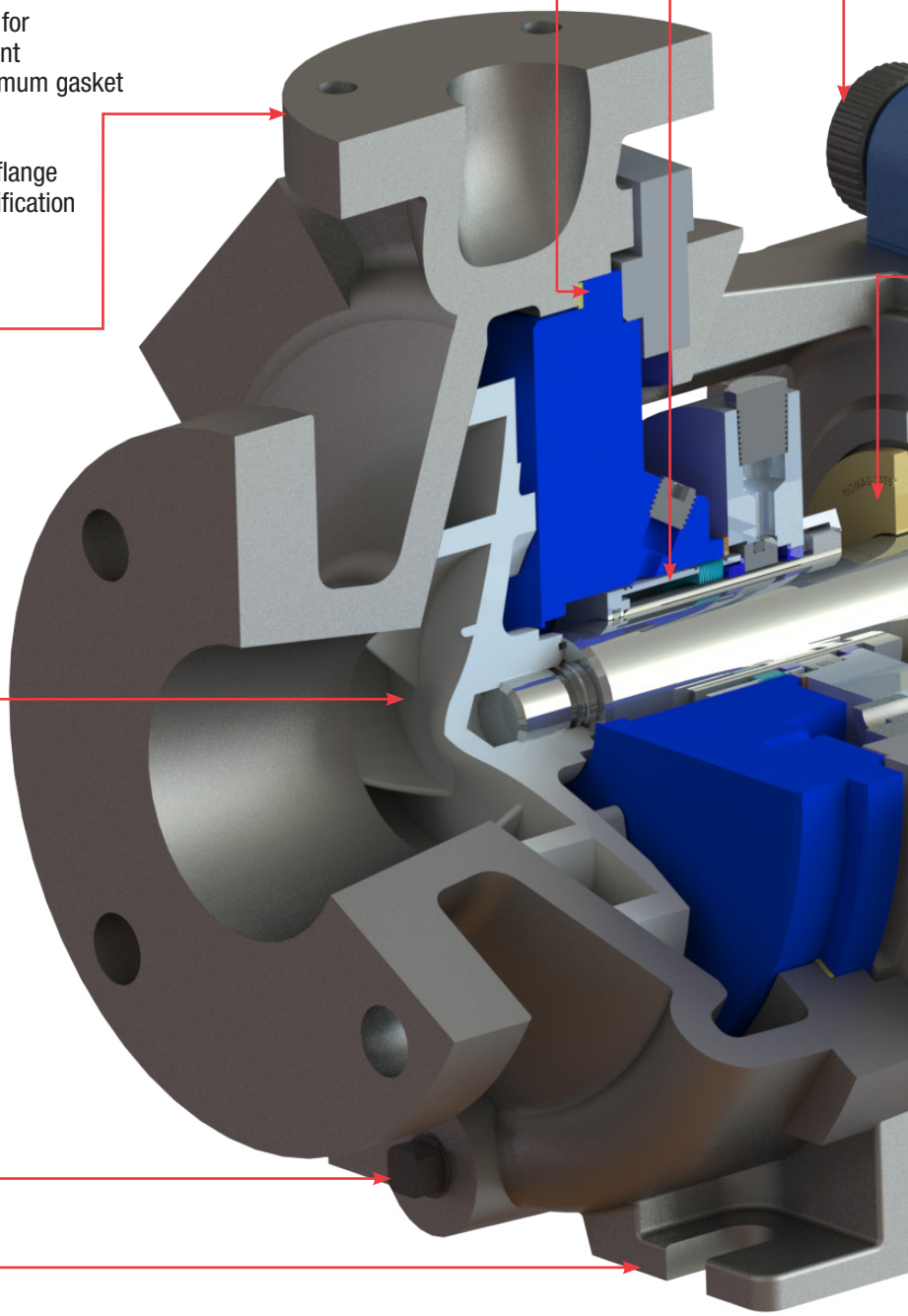

Quality
- Manufactured and tested in the USA

Impeller
- Fully open for increased corrosion, abrasion and solids wear resistance
- Back pump out vanes for reduced thrust loading and seal chamber operating pressure

Delivery
- Pump components strategically inventoried for rapid shipment in a variety of material options

Casing Drain
- Optional casing drain and drain piping

Foot Mounted Casing
- Maximum casing stability and support for back pull out maintenance feature
- Reduced vibration

ePOD Pump Selector

- Access to end users and specifiers to select your pump application online at **www.pumpworks.com**

Sealed Fill/Filter Cap
- Oversized for easier oil changes
- Internal filter, protecting against foreign object contamination when filling

Bearing Housing
- 25% additional cooling surface area than PWA GEN 1
- Sealed lubrication chamber
- Sloped and segregated drain for isolation of contaminants
- Standard flinger disk design with optional purge or pure oil mist lubrication
- Optional finned tube cooler for process temperatures above 450º F
- Internal surfaces cleaned, rust preventative applied, and enamel coated assuring internal casting cleanliness

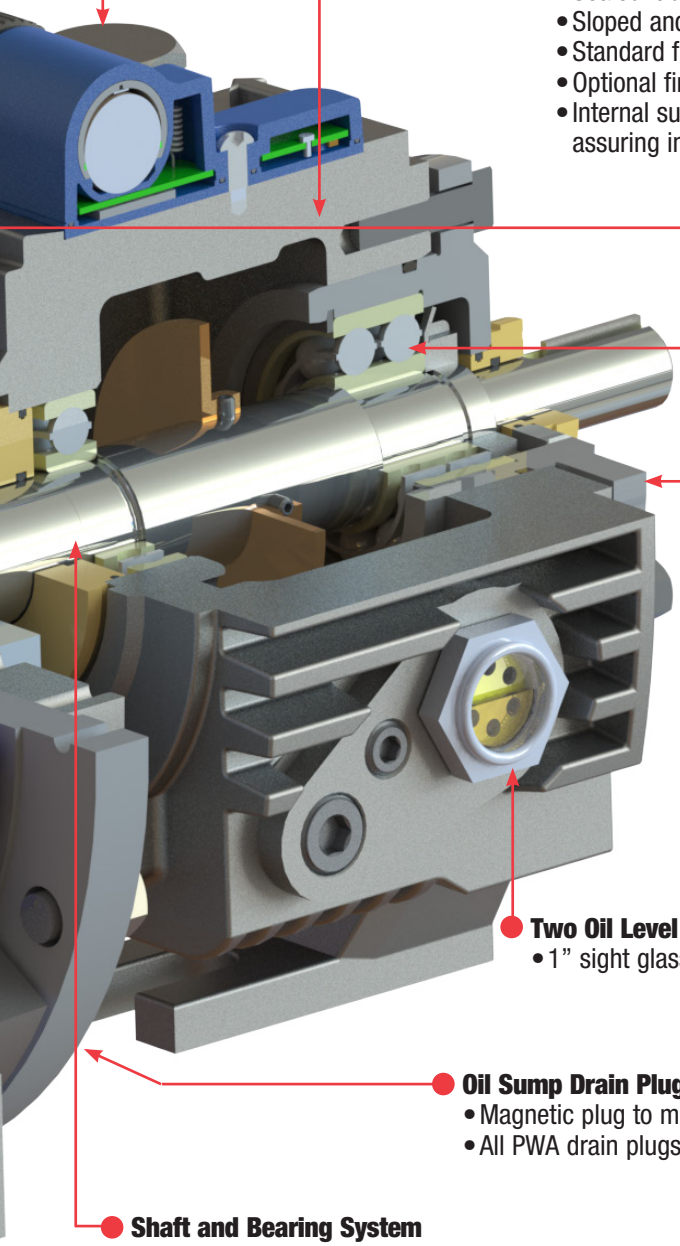

ISOMAG Magnetic Seals
- IP 66 rated Power Frame sealing

Thrust Bearing
- Heavy duty double row standard
- Optional duplex angular contact thrust bearing

Externally Adjustable Shaft and Impeller System
- Easily adjust impeller to front casing clearance without removal of pump from piping
- Restoration to factory efficiencies

Two Oil Level Sight Glasses
- 1” sight glass located on each side of bearing housing for flexible viewing

Oil Sump Drain Plug (Opposite Side)
- Magnetic plug to maintain bearing housing cleanliness and increased protection
- All PWA drain plugs located on side of frames for easy access

Shaft and Bearing System
- Rigid, heavy duty design for minimal shaft deflection at seal area and increased reliability
- Exceeds ASME B73.1 bearing life specification requirements
- 316L SS Shaft material is standard with optional material upgrades available

Predict Plus®

YOUR PUMP WANTS TO TALK TO YOU™

Predict Plus is the Only Wireless and Cloud Connected Machinery Health Monitor Designed Specifically for Proactive Pump Monitoring

- 24/7 online vibration and temperature monitoring device.
- Automatic device registration on the cloud via cellular interface.
- Proactive alerts from the Predict-Cloud.
- Long term storage of trend data including Fast Fourier Transform (FFT).
- Affordable and available as a standard option on all PumpWorks products.
- External or battery powered.

Always On
Predict Plus is CONTINUOUSLY monitoring and logging your pump's health.

Vibration
Self-Calibrating Tri-Axial Accelerometer to capture FFT and RMS vibration data.

Bearing Temperature
Integrated thrust bearing temperature monitoring.

Alerts
Proactive alerts via email and SMS from the Predict-Cloud.

Predict-Cloud is a powerful tool in attaining the goal of reducing maintenance spending and increasing MTBR (Mean Time Between Repairs). By proactively identifying detrimental system conditions prior to catastrophic machine failure.

Predict

Download on the App Store

GET IT ON Google Play

Go to www.predict-cloud.com

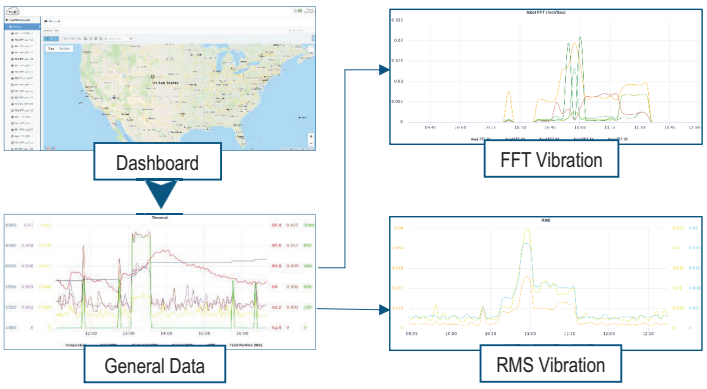

HYDRAULIC PERFORMANCE COVERAGE

60 Hz Performance Coverage

Visit our web site at **www.pumpworks.com** and specify flow and performance needs and obtain pump selection and performance curve.

ePOD ELECTRONIC PUMP ON DEMAND

Performances shown are nominal and are to be used for preliminary selection only.

Capabilities

- Capacities to 1,364 m³/h | 7,000 GPM
- Heads to 223 m | 730 ft
- Temperatures to 371° C | 700° F
- Pressures to 26 bar | 375 PSIG

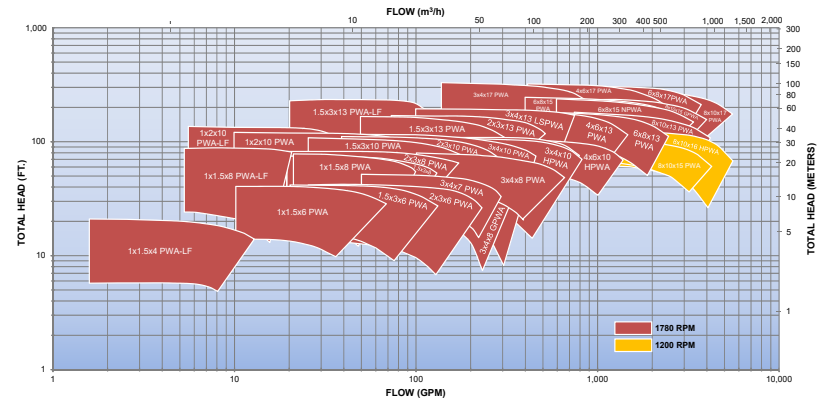

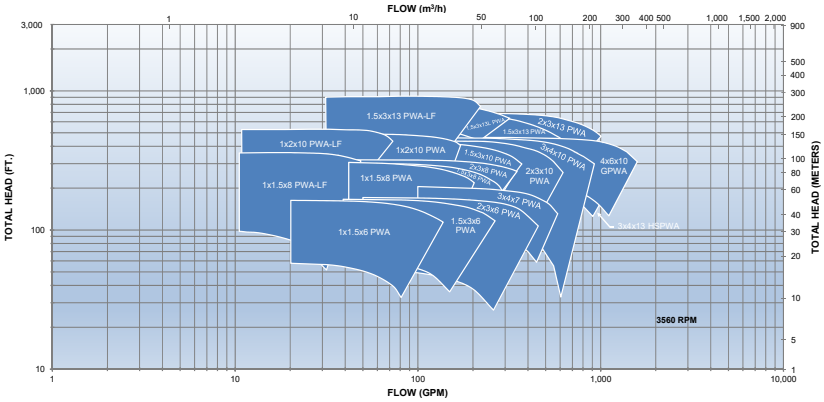

50 Hz Performance Coverage

Visit our web site at **www.pumpworks.com** and specify flow and performance needs and obtain pump selection and performance curve.

ePOD ELECTRONIC PUMP ON DEMAND

Performances shown are nominal and are to be used for preliminary selection only.

Capabilities

- Capacities to 1,364 m³/h | 7,000 GPM
- Heads to 223 m | 730 ft
- Temperatures to 371° C | 700° F
- Pressures to 26 bar | 375 PSIG

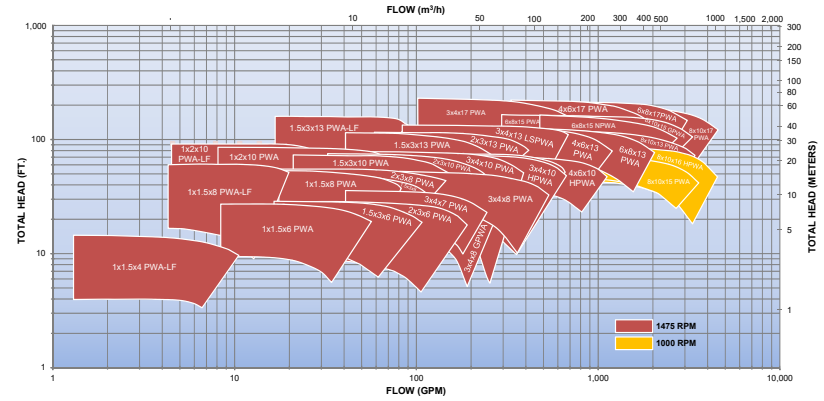

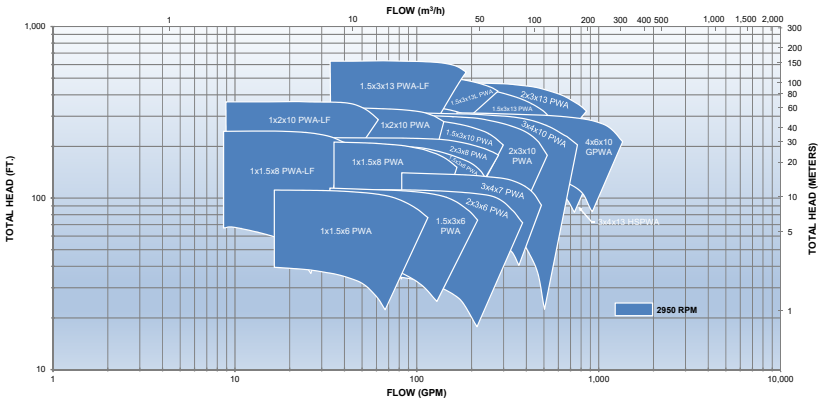

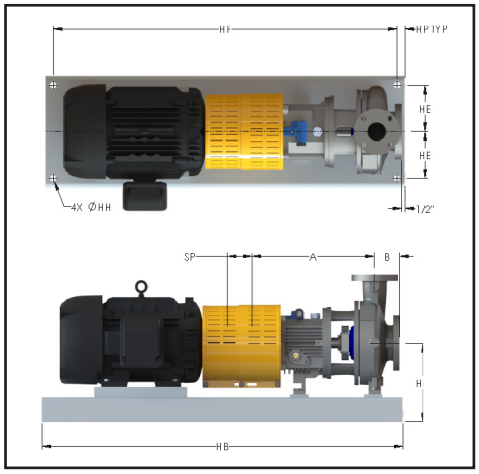

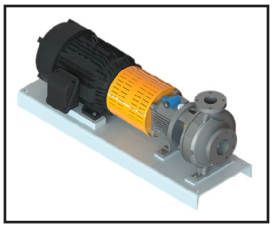

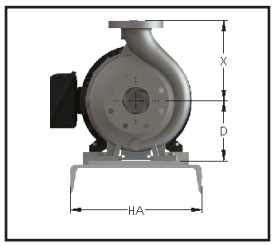

Not to be used for construction unless certified by manufacturer.

NEMA MOTOR FRAME	WEIGHT lb (kg)
182T	98 (45)
184T	128 (58)
213T	197 (89)
215T	226 (103)
254T	375 (170)
256T	412 (187)
284T	495 (225)
286T	519 (235)
324T	700 (318)
326T	756 (343)
364T	948 (430)
365T	1009 (458)
405T	1330 (603)
444T	1820 (826)
445T	1893 (859)
447T	2343 (1073)
449T	3020 (1370)

PUMP DIMENSIONS AND WEIGHTS

Dimensions in inches (mm), weights in lbs. (kg)

FRAME	SIZE	ANSI DESIGNATION	DISCHARGE SIZE	SUCTION SIZE	X	A	B	D	SP	WEIGHT BARE PUMP LBS AND (Kg)
GROUP 1	1x1.5x6	AA	1	1.5	6.5 (165)	13.5 (343)	4.0 (102)	5.25 (133)	3.75 (95)	88 (40)
	1.5x3x6	AB	1.5	3						97 (43)
	2x3x6	AC	2	3						100 (45)
	1x1.5x8	AA	1	1.5						105 (47)
	1.5x3x8	AB	1.5	3						113 (51)
GROUP 2 / GROUP 3	3x4x7	A70	3	4	11 (280)	19.5 (496)	4 (102)	8.25 (210)	3.75 (95)	231 (104)
	2x3x8	A60	2	3	9.5 (242)					210 (95)
	3x4x8	A70	3	4	11 (280)					231 (104)
	3x4x8G	A70	3	4						
	1x2x10	A05	1	2	8.5 (216)					210 (95)
	1.5x3x10	A50	1.5	3						231 (109)
	2x3x10	A60	2	3	9.5 (242)					242 (109)
	3x4x10	A70	3	4	11 (280)					278 (125)
	3x4x10H	A40	3	4	12.5 (318)			10 (254)		289 (130)
	4x6x10G	A80	4	6	13.5 (343)					320 (144)
	4x6x10H	A80	4	6						
	1.5x3x13 & 13L	A20	1.5	3	10.5 (267)					257 (116)
	2x3x13	A30	2	3	11.5 (292)					289 (130)
	3x4x13	A40	3	4	12.5 (318)					347 (156)
	4x6x13	A80	4	6	13.5 (343)					425 (191)
GROUP 4 / GROUP 4–17	6x8x13	A90	6	8	16 (406)	27.875 (708)	6 (152)	14.5 (368)	5.25 (133)	588 (265)
	8x10x13	A100	8	10	18 (457)					704 (317)
	6x8x15	A110	6	8						641 (288)
	8x10x15	A120	8	10	19 (483)					777 (350)
	8x10x15G	A120	8	10						746 (336)
	8x10x16H	A120	8	10						893 (402)
	3x4x17	-	3	4	16 (406)					620 (279)
	4x6x17	A105	4	6						683 (307)
	6x8x17	A110	6	8	18 (457)					767 (345)
	8x10-17 & 17H	A120	8	10	19 (483)					872 (392)

Weights and dimensions are approximate and not to be used for construction.

BASEPLATE DIMENSIONS AND WEIGHTS

Dimensions in inches (mm), weights in lbs. (kg)

MAX NEMA FRAME	ANSI BASEPLATE NUMBER	HA	HB	HD Max				HE	HF	HH	HP TYP	WEIGHT lb (kg)
				D=5.25 (133)	D=8.25 (210)	D=10 (254)	D=14.5 (368)					
184T	139	12 (381)	39 (991)	9 (229)				4.5 (114)	36.5 (927)	0.75 (19)	1.25 (32)	124 (56)
256T	148	15 (457)	48 (1219)	10.5 (267)				6 (152)	45.5 (1156)	0.75 (19)	1.25 (32)	195 (89)
326TS	153	18 (533)	53 (1346)	12.88 (327)				7.5 (191)	50.5 (1283)	0.75 (19)	1.25 (32)	258 (117)
184T	245	12 (381)	45 (1143)		12 (305)	13.75 (349)		4.5 (114)	42.5 (1080)	0.75 (19)	1.25 (32)	133 (61)
215T	252	15 (457)	52 (1321)		12.38 (314)	14.13 (359)		6 (152)	49.5 (1257)	0.75 (19)	1.25 (32)	189 (86)
286T	258	18 (533)	58 (1473)		13 (330)	14.75 (375)		7.5 (191)	55.5 (1410)	1 (25)	1.25 (32)	278 (127)
365T	264	21 (533)	64 (1626)		13.88 (353)	14.75 (375)		7.5 (191)	61.5 (1562)	1 (25)	1.25 (32)	395 (180)
405TS	268	24 (660)	68 (1727)		14.88 (378)	14.88 (378)		9.5 (241)	65.5 (1664)	1 (25)	1.25 (32)	430 (196)
449TS	280	26 (660)	80 (2032)		15.88 (403)	15.88 (403)		9.5 (241)	77.5 (1969)	1 (25)	1.25 (32)	437 (198)
286T	368	24 (660)	68 (1727)				19.25 (489)	9.5 (241)	65.5 (1664)	1 (25)	1.25 (32)	456 (208)
405T	380	26 (660)	80 (2032)				19.25 (489)	9.5 (241)	77.5 (1969)	1 (25)	1.25 (32)	580 (263)
449T	398	26 (660)	98 (2489)				19.25 (489)	9.5 (241)	95.5 (2426)	1 (25)	1.25 (32)	839 (382)

Weights and dimensions are approximate and not to be used for construction.

PWA INTERCHANGEABILITY CHART

Group	Shaft and Frame Assembly	Adapter	Cover	Impeller	Case	Size
Group 1 1-3/8" Shaft Dia. Max BHP-40HP	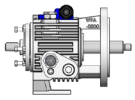					1X1.5X6 AA 1.5X3X6 AB 2X3X6 AC 1X1.5X8 AA 1.5X3X8 AB
Group 2 1-3/4" Shaft Dia. Max BHP-122HP	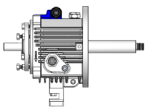					3X4X7 A70 2X3X8 A60 3X4X8 A70 3X4X8G A70 1X2X10 A05 1.5X3X10 A50 2X3X10 A60 3X4X10 A70 3X4X10H A40 4X6X10G A80 4X6X10H A80 1.5X3X13 A20 2X3X13 A30 3X4X13 A40 4X6X13 A80
Group 3 2-1/8" Shaft Dia. Max BHP-200HP	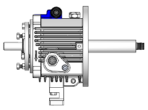					1X2X10 A05 1.5X3X10 A50 2X3X10 A60 3X4X10 A70 3X4X10H A40 4X6X10G A80 4X6X10H A80 1.5X3X13 A20 2X3X13 A30 3X4X13 A40 4X6X13 A80
Group 4 Max BHP-250HP Group 4-17H Max BHP-400HP	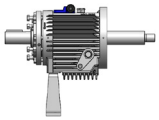					6X8X13 A90 8X10X13 A100 6X8X15 A110 8X10X15 A120 8X10X15G A120 8X10X16H A120 4X6X17 A105 6X8X17 A110 8X10X17 A120

PARTS LIST AND MATERIALS OF CONSTRUCTION

Item Ref Number	Part Name	Carbon Steel	Carbon Steel w/ 316L SS Impeller	316L SS	CA6NM (12 % Chrome)	Duplex SS	Super Duplex SS	Alloy 20	Monel	Nickel	Hastelloy B, C & G	Titanium
100	Casing	Carbon Steel	Carbon steel	316L SS	CA6NM (12%Chrome)	Duplex SS CD4 Gr1B	Super Duplex SS CD4 Gr5A	Alloy 20	Monel	Nickel	Hastelloy B, C & G	Titanium
101	Impeller	Carbon Steel	316L SS	316L SS	CA6NM (12%Chrome)	Duplex SS CD4 Gr1B	Super Duplex SS CD4 Gr5A	Alloy 20	Monel	Nickel	Hastelloy B, C & G	Titanium
105	Lantern Ring	Glass Filled Teflon										
106	Packing, Stuffing Box	Teflon - Impregnated Fibers										
108	Adapter, Frame	Carbon Steel										
112A	Thrust Bearing	Double Row Angular Contact - note (1)										
122	Shaft - Less Sleeve	316L SS (Optional Alloy 20 & Duplex SS A2205)				Duplex A2205		Alloy 20	Monel	Nickel	Hastelloy B, C & G	Titanium
122	Shaft with Sleeve	316L SS (Optional Alloy 20 & Duplex SS A2205)										
126	Shaft Sleeve	316L SS (Optional Alloy 20 & Duplex SS A2205)				Super Duplex SS	Super Duplex SS	Alloy 20	Monel	Nickel	Hastelloy B, C & G	Titanium
134	Thrust Bearing Housing	Carbon Steel										
136	Bearing Lock Nut and Lock Washer	Steel										
168A	Radial Bearing	Single Row Deep Groove										
184	Cover, Stuffing Box (Packed Box)	Carbon Steel	Carbon Steel	316L SS	CA6NM (12%Chrome)	Duplex SS CD4 Gr1B	Super Duplex SS CD4 Gr5A	Alloy 20	Monel	Nickel	Hastelloy B, C & G	Titanium
184	Seal Chamber (Mechanical Seal)	Carbon Steel	Carbon Steel	316L SS	CA6NM (12%Chrome)	Duplex SS CD4 Gr1B	Super Duplex SS CD4 Gr5A	Alloy 20	Monel	Nickel	Hastelloy B, C & G	Titanium
228	Frame, Bearing	Carbon Steel										
248A	Flinger with Set Screws	Bronze with Steel Set Screws										
250	Gland - Seal/Packing	316L SS			CA6NM (12%Chrome)	Duplex SS CD4 Gr1B	Super Duplex SS CD4 Gr5A	Alloy 20	Monel	Nickel	Hastelloy B, C & G	Titanium
370	Stud/Nut, Cover to Adapter	304SS										
319	Sight Glass - Oil	Glass/Steel										
332A	Labyrinth Seal (Outboard)	Bronze										
333A	Labyrinth Seal (Inboard)	Stainless Steel/Bronze										
351	Gasket, Casing	Aramid Fiber with Binder										
358	Plug, Casing Drain (Optional)	Carbon Steel	Carbon Steel	316L SS	CA6NM (12%Chrome)	Duplex SS CD4 Gr1B	Super Duplex SS CD4 Gr5A	Alloy 20	Monel	Nickel	Hastelloy B, C & G	Titanium
360F	Gasket, Frame to Adapter	Buna Rubber										
360C	Gasket, Bearing End Cover	Cellulose Fiber with Binder										
370	Cap Screw, Adapter to Casing	Stainless Steel, ASTM A193										
412A	O-ring, Impeller	Glass Filled Teflon										
418	Jacking Bolt	304SS										
469B	Dowel Pin, Frame to Adapter	Steel										
496	O-ring, Bearing Housing	Buna Rubber										
637	Filter Vent	Carbon Steel										

(1) Duplex angular contact bearing Standard on Group 3, Bearing Frame and optional on Group 1, 2, and 4.

GROUP 1 *Sectional View PWA | GEN 2*

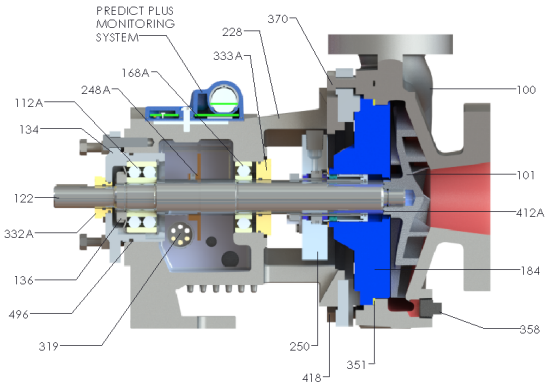

GROUP 2 / GROUP 3 *Sectional View PWA | GEN 2*

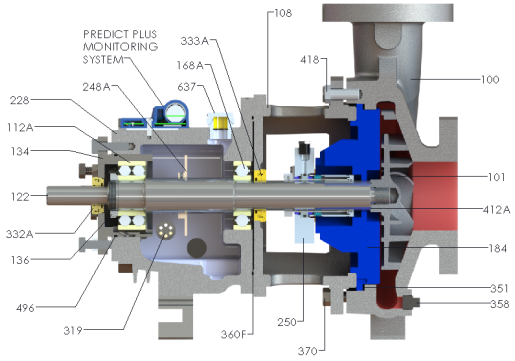

GROUP 4 *Sectional View PWA | GEN 2*

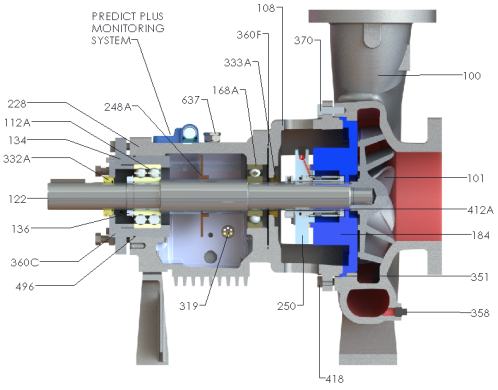

TECHNICAL DATA

All dimensions in inches and (mm)

		GP1	GP2	GP3	GP4
Shaft	Shaft Diameter at Impeller	0.75 (19)	1 (25)	1.25 (32)	1.5 (38)
	Diameter in Stuffing Box/Seal Chamber				
	(Less sleeve)	1.375 (35)	1.75 (45)	2.125 (54)	2.5 (64)
	(With sleeve)	1.125 (29)	1.5 (38)	1.875 (48)	2 (51) note 1
	Diameter Between Bearings	1.5 (38)	2.125 (54)	2.5 (64)	3.125 (79)
	Diameter at Coupling	0.875 (22)	1.125 (29)	1.875 (48)	2.375 (60)
	Overhang	6.125 (156)	8.375 (213)	8.375 (213)	9.969 (253)
	Maximum Shaft Deflection	0.002 (0.05)			
	Shaft Deflection Index (L^3/D^4)				
	(Less sleeve)	64	63	29	25
	(With sleeve)	143	116	48	62
Sleeve	Outside Diameter thru Stuffing Box/Seal Chamber	1.375 (35)	1.75 (45)	2.125 (54)	2.5 (64) note 1
Bearings	Radial	6207	6309	6311	6313
	Thrust	3306	3309	7310	3313
	Bearing Span	4.125 (105)	6.75 (171)	6.875 (164)	9.25 (235)
Large Bore Seal Chamber	Bore	2.875 (73)	3.5 (89)	3.875 (98)	4.75 (120) note 1
Stuffing Box	Bore	2 (51)	2.5 (64)	2.875 (73)	3.375 (86) note 1
Maximum Power Limits	HP (kW) per 100 RPM	1.1 (0.82)	3.4 (2.6)	5.6 (4.2)	14 (10.5) note 2
Maximum Allowable Working Pressure note 3	MAWP PSI (kPa)*	up to 285 PSI (1965 kPa) at 100°F with 150 # flanges			
		up to 375 PSI (2586 kPa) at 100°F with 300 # flanges – note 4			
		*Consult Pressure Temperature chart for various temperatures			
Maximum Temperature note 5	Oil or Grease Lubricated Bearing Frame without Optional Cooling	350° F (177°C)			
	Oil Lubricated Power Frame with Option Cooling	700° F (370°C)			
Casing	Corrosion Allowance	0.125 minimum			

NOTES:
1. 17 inch pump sizes - Shaft diameter at Stuffing Box / Seal Chamber is 2.25 inches (57) with sleeve. Shaft Sleeve Outside Diameter is 2.75 inches (70) for packing and 2.5 inches (64) for mechanical seals.
   Seal chamber bore is 4.75 inches (121). Stuffing box bore is 3.625 inches (92).
2. 17 inch pump sizes power limitation per 100 RPM is 20HP (15kW).
3. Hydro-static test pressure equal to 1.5 times Maximum Allowable Working Pressure.
4. Pressure ratings to 740 PSI (5137 kPa) – consult factory.
5. Tube Finned Cooler, Jacketed Seal Chamber, Graphite Impeller O-ring and Casing Gasket for temperatures between 450° F (232° C) to 700° F (370° C).

Test Facilities

- Test flows up to 7,500 GPM.
- Discharge test pressures up to 740 PSI.
- Supply tank rated from full vacuum to 65 psi.
- 460 volt through 500 HP, 3600 RPM.
- Variable Frequency Drive for precise speed control through 500 HP @ 460 volt.

See our Test Facilities Brochure for more information.

Typical Industries

- Chemical/Petrochemical
- Pulp and Paper
- Food and Beverage
- Oil and Gas
- Primary Metals Manufacturing
- Mining
- Power Generation
- Waste Treatment
- General Industrial

MANUFACTURED & TESTED IN THE USA — THE BEST QUALITY • THE FASTEST DELIVERY

PumpWorks™

Member of: Hydraulic Institute

ISO 9001:2008 BUREAU VERITAS Certification N° US004662-1

PumpWorks • www.pumpworks.com
65 Southbelt Industrial Boulevard, Houston Texas 77047 • Ph. 1.888.405.0209 Fax 713.956.2141
www.pumpworks.com • twitter: @PumpWorks